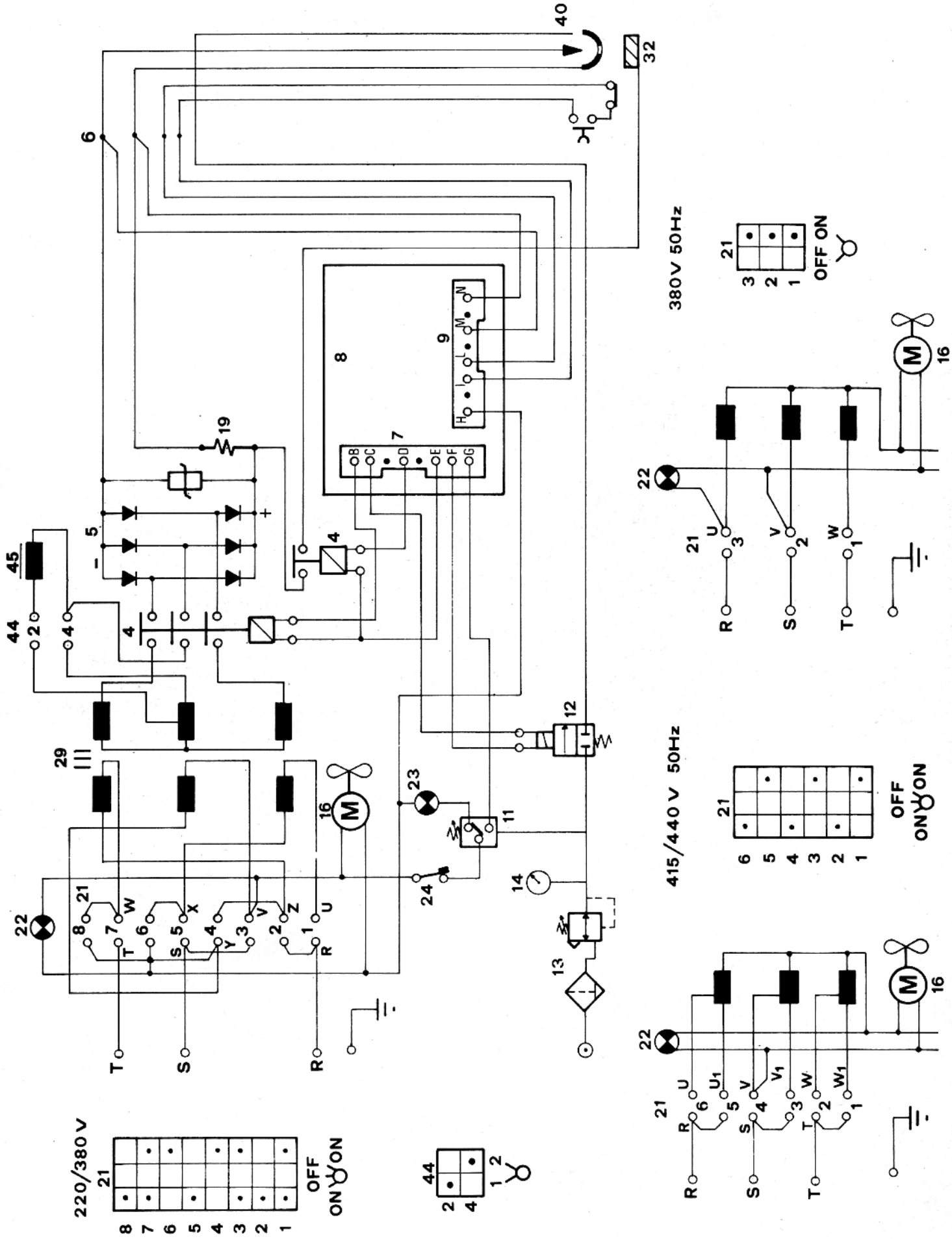
220/380 V
OFF
ON
380 V 50Hz
OFF ON
415/440 V 50Hz
OFF
ON