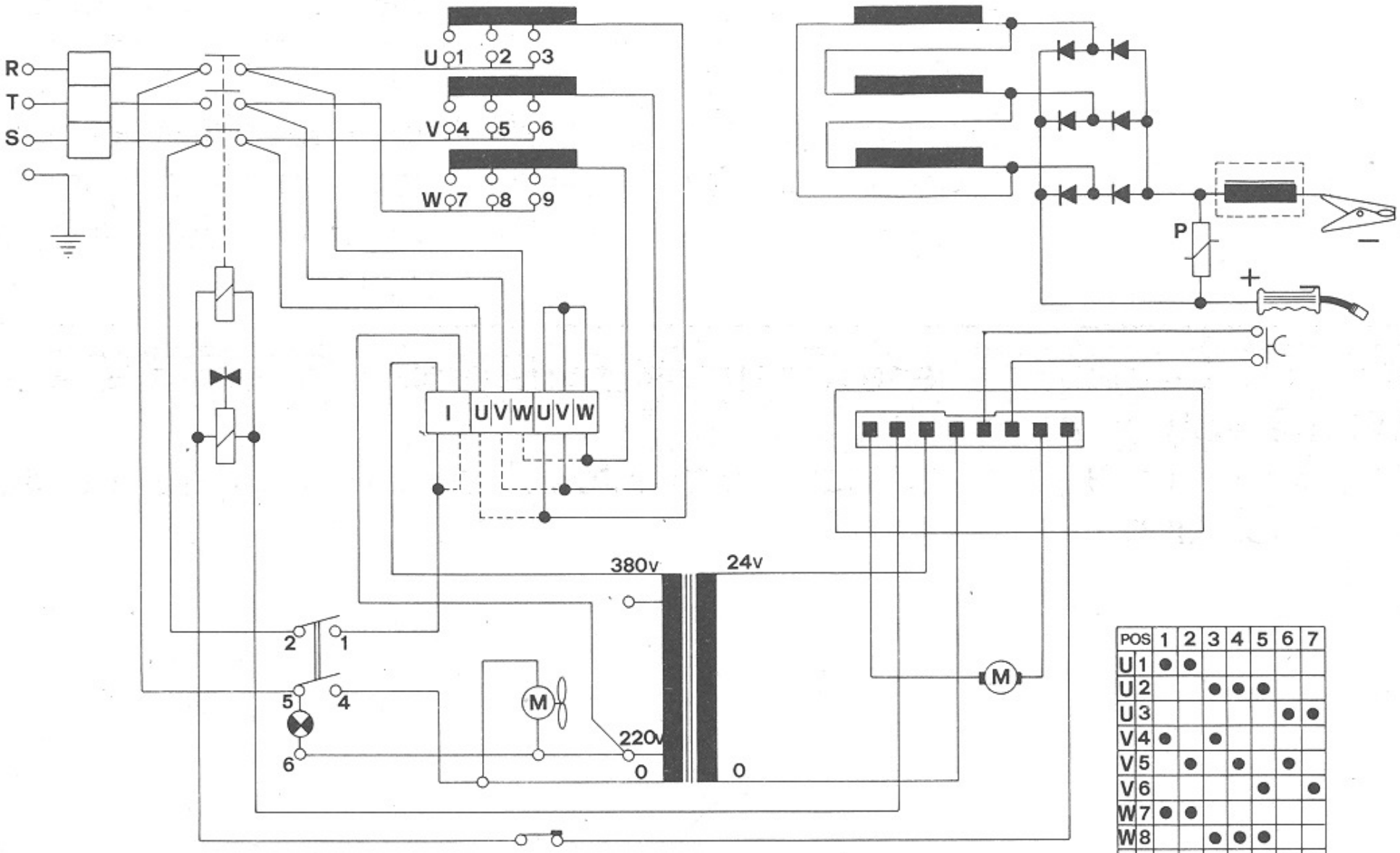

POS	1	2	3	4	5	6	7
U 1	●	●					
U 2			●	●	●		
U 3						●	●
V 4	●		●				
V 5		●		●		●	
V 6					●		●
W 7	●	●					
W 8			●	●	●		
W 9						●	●