Art. 855

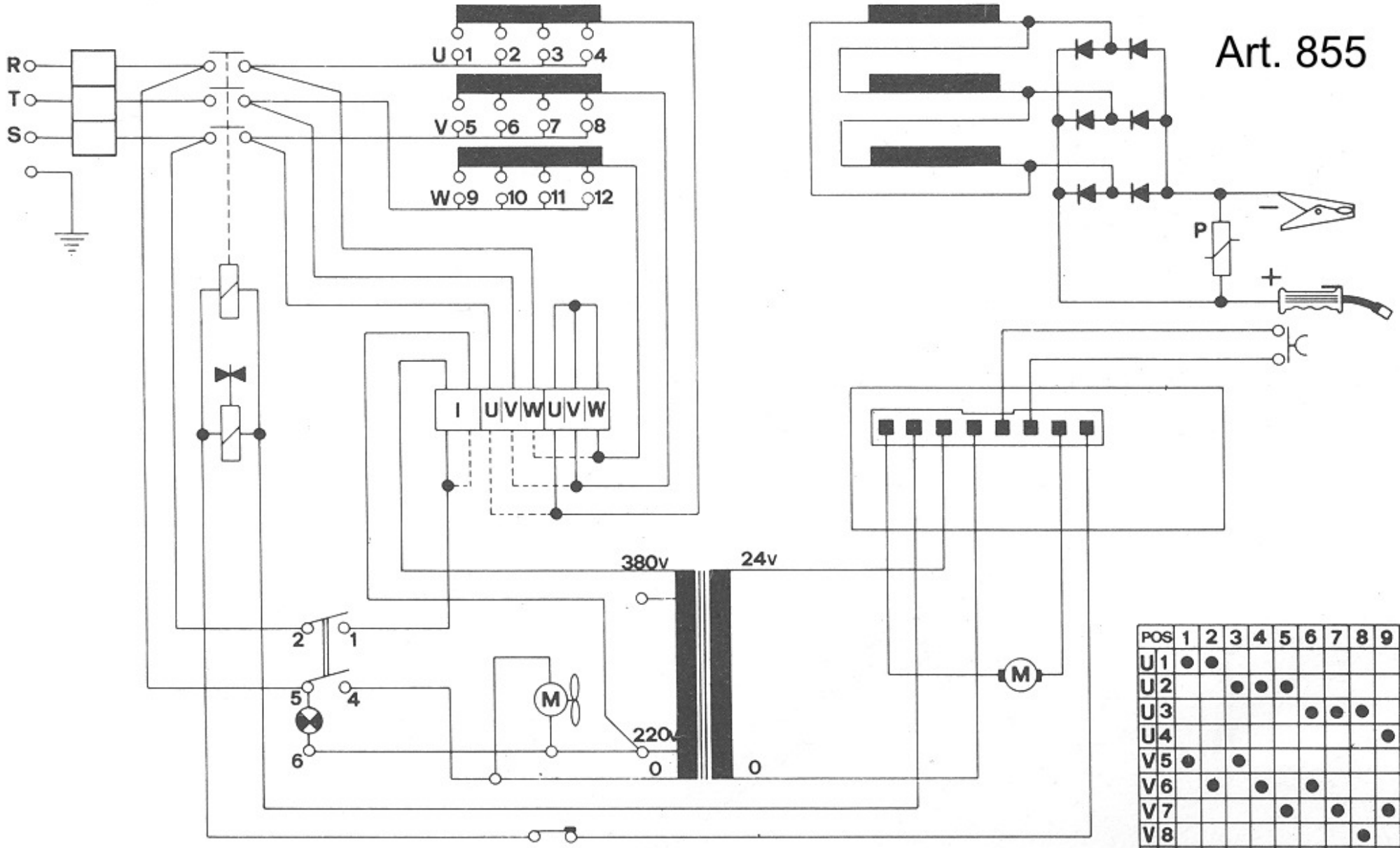

POS	1	2	3	4	5	6	7	8	9	10
U 1	●	●								
U 2			●	●	●					
U 3						●	●	●		
U 4									●	●
V 5	●		●							
V 6		●		●		●				
V 7					●		●		●	
V 8								●		●
W 9	●	●								
W 10			●	●	●					
W 11						●	●	●		
W 12									●	●